The Ignition of Cylindrical Fusion Targets by Multi-Mega-Ampere GeV Proton Beams below the Alfvén Limit

Friedwardt Winterberg

Department of Physics, College of Science, University of Nevada, Reno, Nevada 89557-0220, USA

Reprint requests to F. W.; E-mail: winterbe@unr.edu

Z. Naturforsch. **69a**, 589 – 596 (2014) / DOI: 10.5560/ZNA.2014-0058
Received October 3, 2013 / revised June 30, 2014 / published online October 8, 2014

It is shown that cylindrical deuterium targets can be ignited with multi-mega-ampere GeV proton beams below the Alfvén limit and a small amount of tritium. The proton beams can be generated by discharging a magnetically insulated gigavolt capacitor. Surrounding the thermonuclear micro-explosion with a thick layer of liquid hydrogen, heated to a $\sim 10^5$ K plasma by the thermalization of the fusion reaction neutrons, most of the energy released can be converted into electric energy by a magnetohydrodynamic generator.

Key words: Inertial-Magnetic Confinement; Intense GeV Proton Beams.

1. Introduction

The idea to ignite a thermonuclear micro-explosion by powerful laser and particle beams can be traced back to the late 1960s and the early 1970s. A review of these early efforts both in the USA and USSR was compiled in a Russian monograph [1]. These efforts emerged in part from the nuclear weapons programs in both countries. One proposal was the idea that the goal could be reached through the implosion of a small amount of a liquid or solid deuterium-tritium (DT) mixture to high densities. Because of the poor efficiency of lasers the use of intense relativistic electron beams was also proposed as an alternative [2]. It was soon realized that for the very high compressions needed, the Rayleigh–Taylor instability would pose a serious problem, and it was found by Kidder [3] (see Appendix) that the energy E needed for ignition would scale inverse to the 6th power of the implosion aspect ratio R_0/R, where R_0 is the initial and R the final implosion radius. This law implies that the aspect ratio would scale in proportion to $E^{-1/6}$, or that the ignition energy is very sensitive to the aspect ratio which is limited by the Rayleigh–Taylor instability. According to the still-classified results of the Centurion-halite experiment at the Nevada Test Site, ignition would require about 50 MJ (megajoule) (as reported in the New York Times), which could explain the failure of the 2 MJ laser ignition experiment at the Lawrence Livermore National Laboratory. According to Kidder's $E^{-1/6}$ scaling law, even increasing the laser energy tenfold would only insignificantly decrease the implosion aspect ratio by the factor $10^{-1/6} \approx 0.7$.

In contrast to the implosion ignition concept of spherical targets, charged particle beams offer a different possibility to achieve ignition. In the spherical implosion scheme very high densities ($\sim 10^3$ times solid density) are needed to entrap the charged fusion reaction products within the target, which is the condition for ignition and thermonuclear burn, but the ignition and burn in intense particle beams can be done by the magnetic field of these beams. While in the spherical implosion scheme it is the Rayleigh–Taylor instability which poses a problem, it is in the beam ignition scheme the pinch effect instability, but this instability is only important for currents above the Alfvén limit. For beams below the Alfvén limit the beam stagnation pressure $p_s = (1/2)\rho v^2$ (ρ, v density and velocity of the beam) exceeds the magnetic pressure $p_m = B^2/8\pi$ (B magnetic field of the beam) responsible to drive the pinch instabilities. One may say that for currents below the Alfvén limit the beam can be viewed as a stream of electrically charged particles, while for currents above the Alfvén limit, the beam is an electromagnetic pulse, held together by charged particles. But because ignition and burn requires that the beam current is larger than a critical minimum current to have a magnetic field large enough to confine the charged

fusion products within the beam, a stable configuration is possible if this current is below the Alfvén limit. The minimum critical current for the DT reaction is $1.35 \cdot 10^6$ A, therefore if this current is less than the Alfvén current of the beam, for example less than 10^7 A, stability is ensured. For electron beams this condition can only be satisfied for GeV electrons. For them the bremsstrahlung losses going in proportion to $\gamma = (1 - v^2/c^2)^{-1/2} \sim 10^3$ become prohibitive, but nor for GeV proton beams where for GeV protons $\gamma \sim 1$. The Alfvén current for heavier nuclei is still larger, but such beams would add impurities to the fusion plasma making ignition more difficult if not impossible.

The idea to achieve micro-fusion utilizing the beam magnetic field was first proposed by the author [4] and is translated in reference [1]. This idea was abandoned because of the pinch effect instabilities, but for intense relativistic electron beams it is in this communication revived taking into consideration the enormous advancement in GeV proton beam technology where such a likewise configuration is stable.

2. Ignition of a Cylindrical Target with a 10^7 Ampere-GeV Proton Beam

If a proton beam is focused onto one end of a cylindrical target, the beam not only can be made powerful enough to ignite the target, but its strong azimuthal magnetic field entraps the charged fusion reaction products within the cylinder, launching a detonation wave propagating with supersonic speed down the cylinder [5, 6]. There the fusion gain and yield can in principle be made arbitrarily large, because it only depends on the length of the deuterium rod.

The range of the charged fusion products is determined by their Larmor radius

$$r_l = \frac{\alpha}{B}, \tag{1}$$

where

$$\alpha = \frac{c}{e}\frac{(2MAE)^{1/2}}{Z}. \tag{2}$$

In (1) c, e are the velocity of light and the electron charge, M is the hydrogen mass, A the atomic weight and Z the atomic number, and E is the kinetic energy of the fusion products.

If the magnetic field is produced by the proton beam current I [A], one has at the surface of the deuterium cylinder the azimuthal magnetic field in Tesla [T], with r in meters [m]:

$$B_\phi = 2 \cdot 10^{-7} I/r. \tag{3}$$

Combining (2) with (3) and requesting that $r_l < r$, one finds that

$$I > I_c, \tag{4}$$

where $I_c = 5\alpha$. In Table 1 the values for α and I_c for all the charged fusion products of the DT and DD reaction are compiled. For all of them the critical current is below $I_c = 3.84 \cdot 10^6$ A. Therefore, with the choice $I \sim 10^7$ A, all the charged fusion products are entrapped inside the deuterium cylinder.

For a detonation wave to propagate along a DT cylinder, we can then set

$$\rho L \sim 1\,\mathrm{g\,cm^{-2}}. \tag{5}$$

The stopping length of single GeV protons in dense deuterium is much too large to satisfy (5). But this is different if the stopping length is determined by the electrostatic proton-deuteron two-stream instability [7, 8]. In the presence of a strong azimuthal magnetic field the beam dissipation is enhanced by the formation of a collision-less shock [9], with the thickness of the shock by order of magnitude equal to the Larmor radius of the deuterium-tritium ions at a temperature of 10^9 K. For a magnetic field of the order 10^3 T it is of the order of 10^{-2} cm. With the two-stream instability alone, the stopping length is given by

$$\lambda \cong \frac{1.4c}{\varepsilon^{1/3}\omega_i}, \tag{6}$$

where c is the velocity of light and ω_i the proton ion plasma frequency. Furthermore $\varepsilon = n_b/n$ with n the target number density and $n_b = 2 \cdot 10^{16}\,\mathrm{cm^{-3}}$ the proton

Table 1. Critical ignition currents for thermonuclear reactions.

Reaction	Fusion Prod.	Energy [MeV]	A [T m]	I_c [A]
DT	He^4	3.6	0.27	$1.35 \cdot 10^6$
DD	He^3	0.8	0.11	$5.6 \cdot 10^5$
DD	T	1.0	0.25	$1.25 \cdot 10^6$
DD	H	3.0	0.25	$1.25 \cdot 10^6$
DHe^3	H	14.65	0.56	$3.84 \cdot 10^6$
DHe^3	He^4	3.66	0.28	$1.39 \cdot 10^6$

number density in the beam. For a 100-fold compression one has $n = 5 \cdot 10^{24}\,\mathrm{cm}^{-3}$ with $\omega_i = 2 \cdot 10^{15}\,\mathrm{s}^{-1}$. One there finds that $\varepsilon = 4 \cdot 10^{-9}$ and $\lambda \cong 1.2 \cdot 10^{-2}$ cm. This short length, together with the formation of a collision-less magnetohydrodynamic shock, ensures the dissipation of the beam energy into a small volume at the end of the rod. For a deuterium number density $n = 5 \cdot 10^{24}\,\mathrm{cm}^{-3}$ one has $\rho = 17\,\mathrm{g\,cm}^{-3}$, and to have $\rho L \sim 1\,\mathrm{g\,cm}^{-2}$, then requires that $L \sim 0.06$ cm. With $\lambda < L$, the condition for the ignition of a thermonuclear detonation wave is satisfied. The ignition energy is given by

$$E_{\mathrm{ign}} \sim 3nkT\pi R^2 L\,, \tag{7}$$

where $T \approx 10^9$ K.

For a 100-fold compression, one has $\pi r^2 = 10^{-3}\,\mathrm{cm}^2$, when initially it was $\pi r^2 = 10^{-1}\,\mathrm{cm}^2$. With $\pi r^2 = 10^{-3}\,\mathrm{cm}^2$, $L = 0.06$ cm one finds that $E_{\mathrm{ign}} \approx 1$ GJ. This energy is provided by the 10^7 Ampere-GeV proton beam lasting 10^{-8} s. The time is short enough to ensure the cold compression to high densities. For a 10^3-fold compression, found feasible in later fusion experiments, the ignition energy is ten times less.

The ignition energy can still be much less if the tip of the rod is made of DT, which after its ignition acts as the trigger for a detonation in deuterium. Such a target configuration is shown in Figure 1, where the deuterium rod, to which the DT is attached, is radiatively compressed by the X-rays released from DT and D burn behind the detonation front of the deuterium. In this way the amount of the expensive tritium isotope can be kept at a minimum.

The gain is there only dependent on the length of the deuterium rod. For a GeV proton beam with $I = 10^7$ A, the power is $P = 10^{16}$ W, and it lasts 10^{-8} s, feasible with the discharging of a magnetically insulated gigavolt capacitor, the energy delivered to the target is large enough to ensure ignition. With the DT assisted ignition an energy of about 10 MJ may be sufficient.

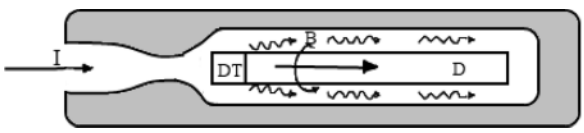

Fig. 1. Cylindrical target with deuterium-tritium (DT) triggered deuterium (D) burn.

3. Stability

In comparison to spherical shell implosion targets, the situation can be very different for cylindrical targets. If ignited with intense ion beams with a current of a few megaamperes, large enough to radially entrap the charged fusion product, the condition $\rho R \sim 1\,\mathrm{g\,cm}^{-2}$ has to be replaced by $\rho L \sim 1\,\mathrm{g\,cm}^{-2}$, where L is the length of the cylindrical target. There the ignition energy E scales as

$$E \sim \rho L R^2 \tag{8}$$

or with $\rho L = \mathrm{const.}$

$$E \sim R^2 \tag{9}$$

independent of L, permitting lower densities for longer cylindrical targets.

If the beam passes through the center of the cylindrical target as shown in Figure 1, and if the beam current is below the Alfvén limit, the target is not subject to the pinch and Taylor instabilities. This can be seen as follows:

For a beam where $\gamma = (1 - \frac{v^2}{c^2})^{-\frac{1}{2}} \gg 1$, with $v \approx c$, the beam creates a stagnation pressure given by

$$p_{\mathrm{s}} = \gamma n M c^2\,, \tag{10}$$

where n is the number density of the ions in the beam and M their mass. This pressure is countered by the magnetic pressure of the beam in the forward and side direction

$$p_{\mathrm{m}} = \frac{B^2}{4\pi}\,, \tag{11}$$

where

$$B = \frac{2I}{rc} \tag{12}$$

with the beam current I of beam radius r given by $(v/c \approx 1)$

$$I = \pi r^2 n e v \approx \pi r^2 n e c\,, \tag{13}$$

where n is the ion density in the beam and e the electric charge. Hence

$$n = \frac{I}{\pi r^2 e c}\,. \tag{14}$$

Then, if the condition $p_s > p_m$ is satisfied, or

$$\gamma n M c^2 > \frac{B^2}{4\pi} \tag{15}$$

the beam is 'stiff' with regard to all pinch instabilities, and also against the cylindrical Taylor instability of a cylindrical beam implosion.

Inserting into (15) the expressions for n and B, one obtains

$$I < \frac{\gamma M c^3}{e} = I_A\,, \tag{16}$$

where I_A is the limiting Alfvén current. This means the beam is stable regardless of its radius, if the current is below the Alfvén limit. This condition can be met by going to high beam voltages.

For a GeV proton beam with $Mc^2 = 0.94$ GeV, $\gamma \approx 1$,

$$I_A = 3.1 \cdot 10^7\ [\mathrm{A}]\,. \tag{17}$$

This current is well above the critical current for the DT and DD reaction given in Table 1, and it follows that a GeV proton beam current of 10^7 A would still exert a large enough stagnation pressure to counter the pinch and Taylor instabilities, making possible the ignition of a cylindrical deuterium target.

4. Dissipating the Neutron Energy in a Shell of Liquid Hydrogen Surrounding the Target

In DT fusion about 80% (in D fusion less) of the energy is released into neutrons, which cannot be deflected by a magnetic field. A nice solution exists for this problem by surrounding the neutron-releasing micro-explosion with a sufficiently thick layer of liquid hydrogen, stopping in it the neutrons and heating it to a high temperature fully ionized plasma which can be deflected by a magnetic field.

It is here proposed to place the thermonuclear target in the center of a liquid hydrogen sphere, with the target to be ignited by a GeV ion beam passing through a pipe (see Fig. 2). To increase the energy output, the hydrogen sphere can be surrounded by a shell made from a neutron absorbing boron. The energy released as energetic α-particles by the absorption of the neutrons in the boron not only increases the overall energy output, but also compresses the hydrogen sphere. Following the ignition and burn of the target, the hydrogen is converted into an expanding hot plasma fire ball for mognetohydrodynamic conversion into electric energy.

A proton beam for ignition is chosen because hydrogen has the smallest amount of bremsstrahlung. The same is true for a deuteron beam where $I_A = 6 \cdot 10^7$ [A] is twice as large making the beam even 'stiffer'.

For this idea to work, the radius of the liquid hydrogen sphere must be large enough to slow down and stop the neutrons, but not be larger than is required to keep its temperature at or above 10^5 K. This condition can be met for liquid hydrogen spheres of reasonable dimensions.

As in fission reactors, the neutron physics is determined by the slowing down and diffusion of the neutrons in the blanket. Assuming that the radius of the target is small compared to the outer radius of the neutron-absorbing blanket, one can approximate the neutron source of the burning target as a point source.

We use the Fermi age theory [10] for the slowing down of the neutrons from their initial energy E_0 to their final energy E. The neutron-slowing down is determined by the Fermi age equation

$$\frac{\partial q}{\partial \tau} = \nabla^2 q\,, \tag{18}$$

where the 'age' τ is given by

$$\tau(E) = \int_E^{E_0} \frac{D}{\xi \Sigma_s E}\, \mathrm{d}E\,. \tag{19}$$

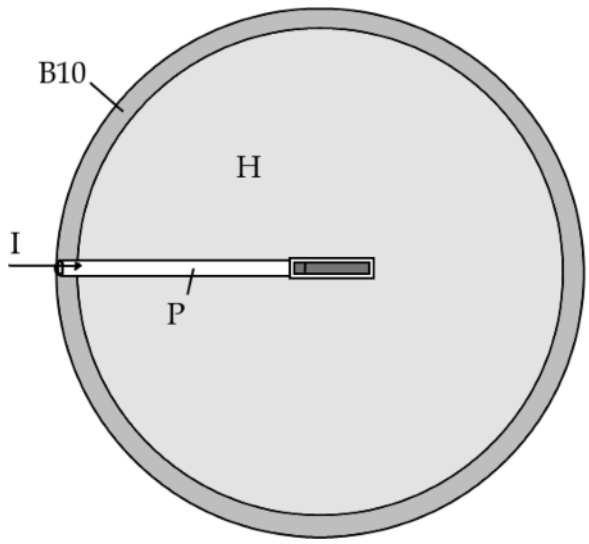

Fig. 2. Cylindrical fusion target placed inside a shell of liquid hydrogen. I is the proton beam to ignite the target, with I projected through a thin pipe P. H is liquid hydrogen, B10 solid boron.

D is the neutron diffusion constant

$$D = \frac{1}{3\Sigma_s(1-\mu_0)} \tag{20}$$

with Σ_s the macroscopic scattering cross-section, $\Sigma_s = n\sigma_s$, where n is the particle number density in the blanket, and σ_s is the scattering cross-section. Futhermore,

$$\mu_0 = \frac{2}{3A} \tag{21}$$

is a scattering coefficient for a substance of atomic weight A. For hydrogen, one has $A = 1$ and hence $\mu_0 = 2/3$, making $D = 1/\Sigma_s$. The logarithmic energy decrement of the neutron deceleration is given by

$$\xi = 1 + \frac{(A-1)^2}{2A} \ln \frac{A-1}{A+1} \tag{22}$$

For $A = 1$, one has $\xi = 1$.

Setting $E_0 = 14\,\text{MeV}$ (DT reaction), $E = 10\,\text{eV}$ (10^5 K), and using the neutron physics data of the Brookhaven National Laboratory [11], one finds that $\tau \cong 6 \cdot 10^2\,\text{cm}^2$ and $\sqrt{\tau} \cong 20\,\text{cm}$. For water, one has, by comparison for the $E_0 = 2\,\text{MeV}$ fission energy, neutrons slowed down to the thermal energy $E = 2 \cdot 10^{-2}\,\text{eV}$, $\tau = 33\,\text{cm}^2$, and $\sqrt{\tau} = 5.7\,\text{cm}$. However, for the production of a 10^5 K plasma, water is unsuitable because at these temperatures most of the energy goes into blackbody radiation. For this reason alone, hydrogen has to be used.

The expression for τ given by (19) ignores neutron absorption during the slowing down process. If taken into account, one has to multiply $\tau(E)$ with the resonance escape probability $p(E)$ given by

$$p(E) = \exp\left(-\frac{1}{\xi}\int_E^{E_0} \frac{\Sigma_a}{\Sigma_a + \Sigma_s}\frac{dE}{E}\right), \tag{23}$$

where $\Sigma_a = n_a\sigma_a$ is the macroscopic absorption cross-section, with n_a as the particle number density of the neutron absorbing substance, and σ_a is the microscopic absorption cross-section. For graphite-moderated reactors $p \approx 0.5$. For large σ_a and even if $n_a \ll n$, $p(E)$ can substantially reduce τ and hence the stopping length.

Another important number is the slowing down time for the neutrons, given by

$$t_0 = \frac{\sqrt{2M}}{\xi\bar{\Sigma}_s}\left(\frac{1}{\sqrt{E_{th}} - \frac{1}{\sqrt{E_0}}}\right), \tag{24}$$

where M is the neutron mass.

For liquid hydrogen $t_0 \approx 10^{-5}$ s. This time is much longer than the time of the DT micro-explosion, but it must be about equal to the expansion time of the fire ball with an initial radius R. For an expanding plasma fire ball of initial radius R and expansion velocity V, one has

$$t_0 \cong \frac{R}{V}. \tag{25}$$

At a temperature of 10^5 K, the expansion velocity is $V \approx 30\,\text{km}\,\text{s}^{-1}$, and setting $R \cong \sqrt{\tau} = 20\,\text{cm}$, one has $t_0 \cong 10^{-5}$ s. For liquid hydrogen where $n = 5 \cdot 10^{22}\,\text{cm}^{-3}$, the total number of hydrogen atoms in a spherical volume with a radius of 20 cm is of the order $N = 2 \cdot 10^{27}$. Heated to a temperature of $T = 10^5$ K, the thermal energy of the fire ball is of the order $E \cong NkT \approx 3$ GJ or equivalent to 1 ton of TNT. For a DT target requiring an ignition energy of 1 – 10 MJ, this is a gain of the order 300. The subsequent deuterium burn could increase the gain about tenfold, reaching a hydrogen temperature up to 10^6 K with an expansion velocity $V \approx 100\,\text{km}\,\text{s}^{-1}$.

5. Spatial Distribution of the Decelerated Neutrons

Making the point-source approximation for the neutrons released from the DT fusion micro-explosion, their spatial distribution by the Fermi age equation is

$$q(r,t) = \frac{e^{-r^2/4\tau}}{(4\pi\tau)^{\frac{3}{2}}}. \tag{26}$$

The slowing down of the neutrons is followed by their diffusion which is ruled by the diffusion equation in spherical coordinates,

$$D\frac{1}{r^2}\frac{\partial}{\partial r}\left(r^2\frac{\partial\phi}{\partial r}\right) - \Sigma_a\phi + S = \frac{\partial n}{\partial t}, \tag{27}$$

where ϕ is the neutron flux, $\Sigma_a = n\sigma_a$, with σ_a the neutron absorption cross-section. S is the neutron source given by pq.

Surrounding the hydrogen by boron, the diffusion equation must be solved with the boundary condition for the neutron flux in hydrogen A and boron B:

$$\begin{aligned} \phi_A &= \phi_B \\ D_A\frac{d\phi_A}{dr} &= D_B\frac{d\phi_B}{dr}. \end{aligned} \tag{28}$$

Because of the very large neutron absorption cross-section for thermal (or epithermal) neutrons, only a comparatively thin layer of boron is needed. The 3 MeV of energy released in charged particles by the neutron absorption of neutrons in boron can be simply added to the neutron energy of the thermonuclear micro-explosion.

6. On Magnetic Insulation and Inductive Charging

There are two concepts which are of great importance for the envisioned realization of this idea:

(i) The concept of magnetic insulation, which permits the attainment of ultrahigh voltages in high vacuum [2].
(ii) The concept of inductive charging, by which a magnetically insulated conductor can be charged up to very high electric potentials [12].

6.1. Concept of Magnetic Insulation

In a greatly simplified way magnetic insulation can be understood as follows: If the electric field on the surface of a negatively charged conductor reaches a critical field of the order $E_c \sim 10^9\,\mathrm{V\,m^{-1}}$, the conductor becomes the source of electrons emitted by field emission. The critical field for the emission of ions from a positively charged conductor is $\sim 10^{10}\,\mathrm{V\,m^{-1}}$. Therefore, if in a high voltage diode the electric field reaches $\sim 10^9\,\mathrm{V\,m^{-1}}$, breakdown will occur by electric field emission from the cathode to the anode. But if a magnetic field, of strength B, is applied in a direction parallel to the negatively charged surface and thus perpendicular to the direction of the magnetic field, and if $\mathbf{B} > \mathbf{E}/c$, where $\mathbf{E}$ is measured in Volt per meter and $\mathbf{B}$ in Tesla, the field emitted electrons make a drift motion parallel to the surface of the conductor with the velocity

$$\mathbf{v}_d = \frac{\mathbf{E}}{\mathbf{B}}\,. \tag{29}$$

To keep $|\mathbf{v}_d| < c$, then requires that $\mathbf{E} < c\mathbf{B}$. Let us assume that $B = 2\,\mathrm{T}$, which can be reached with ordinary electromagnets, requires that $E \leq 6 \cdot 10^8\,\mathrm{V\,m^{-1}}$. A conductor with radius of $l \sim 10\,\mathrm{m} = 10^3\,\mathrm{cm}$, can then be charged to a voltage of the order $El \leq 6 \cdot 10^9\,\mathrm{V}$.

This idea, however, can only work if the magnetically insulated conductor is surrounded by an ultrahigh vacuum, and if it has a topology for which the magnetic field lines are closed in the vacuum, generating an azimuthal magnetic field. The simplest configuration having the required property is a torus with toroidal currents [1]. It requires that the torus is a superconductor levitated in ultrahigh vacuum. This remains to be a difficult problem. In principle the GeV energies could also be reached with conventional accelerators.

6.2. Concept of Inductive Charging

To charge the magnetically insulated torus acting as a gigavolt capacitor, we choose a large but hollow cylinder, which at the same time serves to act as a large magnetic field coil. If on the inside of this coil thermionic electron emitters are placed, and if the magnetic field of the coil rises in time, Maxwell's equation $\mathrm{curl}\,\mathbf{E} = -(1/c)\partial\mathbf{B}/\partial t$ induces inside the coil an azimuthal electric field

$$E_\phi = -\frac{r}{2c}\dot{B}_z\,, \tag{30}$$

where $B = B_z$ is directed along the z-axis, with r the radial distance from the axis of the coil. In combination with the axial magnetic field, the electrons from the thermionic emitters make a radial inward directed drift motion with the velocity

$$v_r = c\frac{E_\phi}{B_z} = -\frac{r}{2}\frac{\dot{B}_z}{B_z}\,. \tag{31}$$

By Maxwell's equation $\mathrm{div}\mathbf{E} = 4\pi ne$, this leads to the buildup of an electron cloud inside the cylinder resulting in the radial electric field

$$E_r = 2\pi ner\,. \tag{32}$$

This radial electric field leads to an additional azimuthal drift motion with the velocity

$$v_\phi = c\frac{E_r}{B_z} \tag{33}$$

superimposed on the radially directed inward drift motion v_r.

For the newly formed electron cloud to be stable, its maximum electron number density must be below the Brillouin limit

$$n < n_{\max} = \frac{B^2}{(4\pi mc^2)}\,, \tag{34}$$

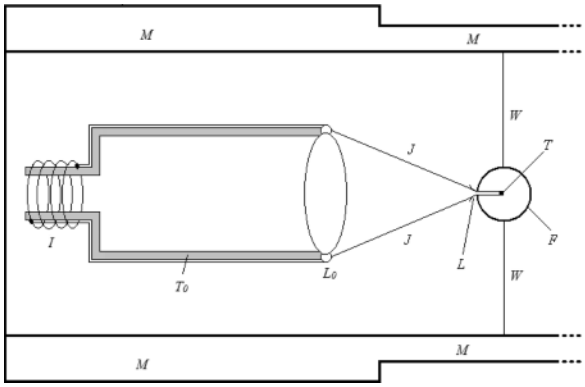

Fig. 3. T_0 to GeV potentials positively charged up torus, T fusion target, F fusion assembly, J hydrogen jets, L Laval nozzle, L_0 induction loop, I induction injector charge, W wires suspending and grounding fusion assembly, M magnetic field coils to levitate torus and convert rapidly expanding assembly into electric energy.

where $mc^2 = 8.2 \cdot 10^{-14}$ J is the electron rest mass energy. For $B = 2$ T one finds that $n_{\max} \approx 4 \cdot 10^{13}$ cm^{-3}. To reach with a cylindrical electron cloud of radius R a potential equal to V requires an electron number density $n \approx V/\pi e R^2$. For $V = 10^9$ V and $R = 10$ m, one finds that $n \sim 2 \cdot 10^9$ cm^{-3}, well below $n_{\max}$.

7. Implementation

A sketch of a possible implementation for the proposed concept is shown in Figure 3. It shows the up-to GeV potentials charged torus T_0, having the form of a long pipe, and the fusion assembly F, containing in its center the fusion target T. The fusion assembly is grounded with wires holding it in its position. To make a breakdown between F and T_0, it is proposed to launch jets of condensed hydrogen from the entrance for the ion beam into the fusion assembly F. The energy to drive the jet could be supplied by a laser beam or a small explosive charge. The jet is ideally a hollow conical jet. It can be produced by an annular Laval nozzle, using the technique developed by Becker, Bier, and Henkes [13].

Part of the energy released in the fusion generated rapidly expanding plasma is converted into an electric pulse into the induction loop L_0, which drives the inductive charge injector I.

One important problem is to sustain the high vacuum following each fusion explosion. While there seems to be no 'patent solution' in sight, a possible solution could be making not just one, but many toruses, which, by using switches, can be rapidly connected or separated from each other.

8. Conclusion

While the laser fusion implosion ignition scheme has failed because of the underestimated influence of the Rayleigh–Taylor instability, the important instabilities here would be the pinch instabilities, which are not working as long as the proton beam is below the Alfvén limit. With the beam stagnation pressure remaining larger than the magnetic beam pressure, the Rayleigh–Taylor instability is likely to be here also suppressed, as the experience of GeV proton beam accelerators shows. For a GeV proton beam this limit is of the order 30 MA, well above a critical current for fusion reaction α-particle entrapment. In comparison to other inertial fusion concepts the implementation of this idea is more expensive but more likely to be feasible. With its potential to make possible the controlled release of nuclear energy by fusion and without fission, and without the nuclear waste disposal problems of fission reactors, it offers an interesting alternative.

Appendix

Kidder's scaling law [3] is obtained as follows: The energy input for ignition is

$$E \sim \frac{1}{2} M v_{\text{imp}}^2 \sim \rho R^3 \sim \frac{(\rho R)^3}{\rho^2}\,, \tag{A1}$$

where M is the mass of the target and v_{imp} the implosion velocity. Since for thermonuclear ignition ρR is fixed by $\rho R > 1$ g cm^{-2} for the DT reaction, one has

$$E \sim \frac{1}{\rho^2}\,. \tag{A2}$$

If $R = R_0$ is the radius at the beginning of the implosion and $R < R_0$ the final radius at the end of the implosion, one has

$$\frac{\rho}{\rho_0} = \left(\frac{R_0}{R}\right)^3 \tag{A3}$$

and hence

$$E \sim \left(\frac{R}{R_0}\right)^6 \tag{A4}$$

or

$$\frac{R_0}{R} \sim E^{-1/6}\,. \tag{A5}$$

This result means that the ignition energy is very sensitive to the ratio R_0/R, or vice-versa, the ratio R_0/R is very insensitive to the energy input and is limited by the Rayleigh–Taylor instability. This scaling law is valid for a massive target. For a thin shell target the Rayleigh–Taylor instability can be expected to be larger. For this reason a massive target gives the most optimistic prediction for the spherical implosion ignition concept.

[1] Problems of Laser Thermonuclear Fusion (contains translated paper by author, [4]), A. A. Filyukov (Ed.) with Preface by Academician E. P. Velikhov, Atomizdat 1976 (in Russian).

[2] F. Winterberg, Phys. Rev. **174**, 212 (1968).

[3] R. E. Kidder, Laser fusion: the first ten years (1962 – 1972), in: High-Power Laser Ablation, SPIE Proceedings, C. R. Phipps (Ed.), Vol. 3343, pp. 10 – 33. SPIE, Bellinghmam, WA 1998.

[4] F. Winterberg, Nucl. Fusion **12**, 353 (1972).

[5] F. Winterberg, Atomkernenergie **39**, 181 (1981).

[6] F. Winterberg, Atomkernenergie **39**, 265 (1981).

[7] F. Winterberg, The Release of Thermonuclear Energy by Inertial Confinement, World Scientific, New Jersey, London, Singapore, Beijing, Shanghai, Hong Kong, Taipei, Chennai 2010, p. 143.

[8] O. Buneman, Phys. Rev. **115**, 503 (1959).

[9] L. Davis, R. Lüst, and A. Schlüter, Z. Naturforsch. **13a**, 916 (1958).

[10] S. Glasstone, Principles of Nuclear Reactor Engineering, D. Van Nostrand Co., Princeton, New Jersey 1955.

[11] Neutron Cross Sections, Brookhaven National Laboratory Report BNL 325, 2nd edn., July 1, 1958.

[12] G. S. Janes, R. H. Levy, H. A. Bethe, and B. T. Feld, Phys. Rev. **145**, 925 (1966).

[13] E. W. Becker, K. Bier, and W. Henkes, Z. Phys. **146**, 333 (1956).